Online

Expert

Posts: 2737

the cells form a resistance of sorts, the more cells you have in series, the more resistance and the less capacitance. which all become part of the tank circuit
cells in series, become capacitors in series, which reduces the capacitance.
cells in parallel, become capacitors in parallel, which adds capacitance.
cells in series add resistance
wire length adds resistance, as well as wire material can be different resistance
wires side by side form capacitance
wires wrapped around in a circle, form inductance

Series LC circuit [edit]

Series LC circuit [edit]

In the series configuration of the LC circuit, the inductor *L* and capacitor *C* are connected in series, as shown here. The total voltage *v* across the open terminals is simply the sum of the voltage across the inductor and the voltage across the capacitor. The current *i* flowing into the positive terminal of the circuit is equal to the current flowing through both the capacitor and the inductor.

$$v = v_L + v_C$$
$$i = i_L = i_C$$

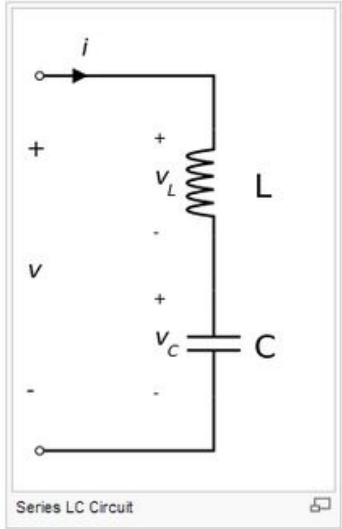

Series LC Circuit

Resonance [edit]

Inductive reactance magnitude (X_L) increases as frequency increases while capacitive reactance magnitude (X_C) decreases with the increase in frequency. At one particular frequency these two reactances are equal in magnitude but opposite in sign. The frequency at which this happens is called the resonant frequency (f_0) for the given circuit.

Hence, at resonance:

$$X_L = -X_C$$
$$\omega L = \frac{1}{\omega C}$$

Solving for ω, we have

$$\omega = \omega_0 = \frac{1}{\sqrt{LC}}$$

which is defined as the resonant angular frequency of the circuit.

Converting angular frequency (in radians per second) into frequency (in hertz), we have

$$f_0 = \frac{\omega_0}{2\pi} = \frac{1}{2\pi\sqrt{LC}}$$

In a series configuration, X_C and X_L cancel each other out. In real, rather than idealised components the current is opposed, mostly by the resistance of the coil windings. Thus, the current supplied to a series resonant circuit is a maximum at resonance.

- In the limit as $f \to f_0$ current is maximum. Circuit impedance is minimum. In this state a circuit is called an *acceptor circuit*[citation needed].
- For $f < f_0$, $X_L \ll (-X_C)$. Hence circuit is capacitive.
- For $f > f_0$, $X_L \gg (-X_C)$. Hence circuit is inductive.

Online

Expert

Posts: 2737

the primary and secondary are just a pulsed transformer.
the highest voltage output will be at a frequency determed by the core saturation and gate applied to it.
the output will be an AC type wave and the core will not be saturated, but just below saturation.
saturation means the core would be a full on magnet
as you can see here the pulse forming network increases the magnetic field of the core and then the gate turns off to allow the core to unmagnetise.

this is from a magnetic field probe resting on the core material
this will be the wave induced into the secondary and or a pick up coil

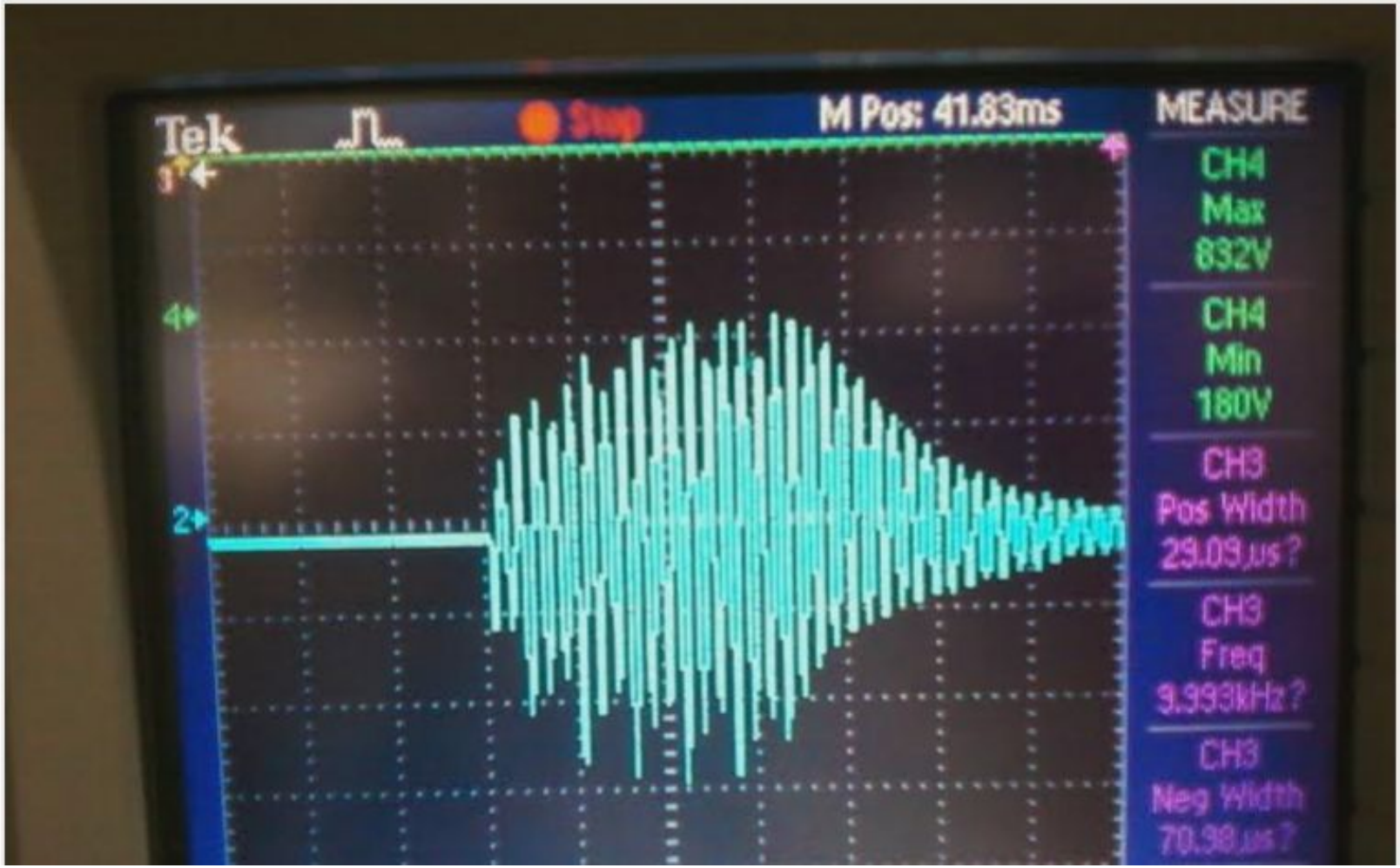

Online

Expert

Posts: 2737

note the 2 C core are really a TOROID.
a toroid is just a doughnut shaped core

http://en.wikipedia.org/wiki/Toroidal_inductors_and_transformers

toroid math and vectors apply

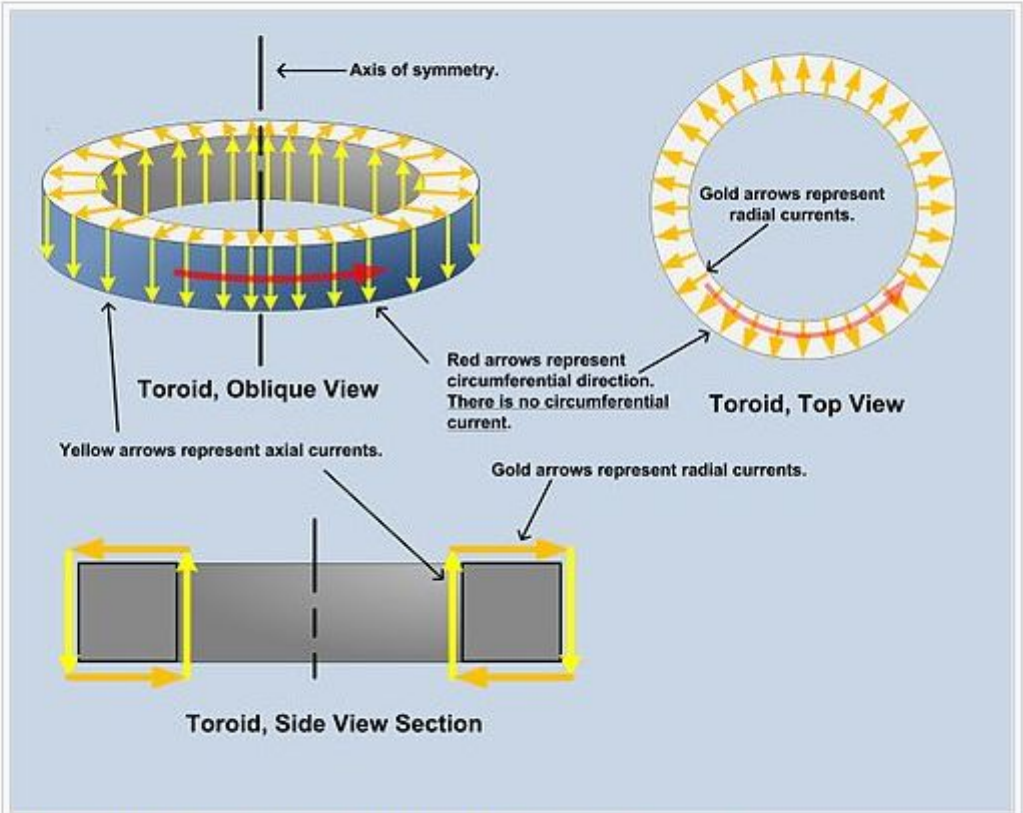

Fig. 2. An axially symmetric toroidal inductor with no circumferential current.

(19.PNG)

Online

Expert

Posts: 2737

the original VIC with the flat cores.

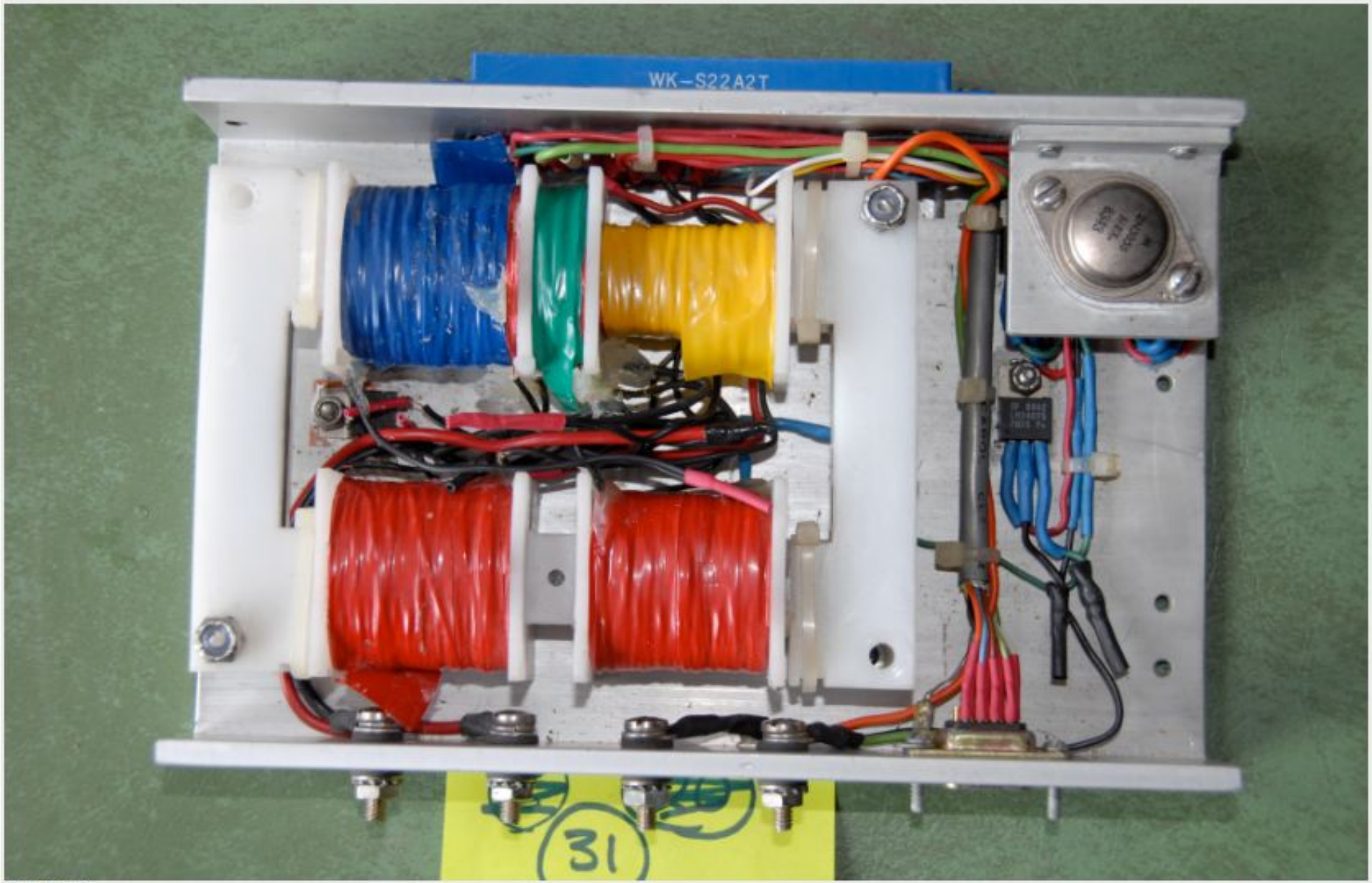

(12.PNG)

Online

Expert

Posts: 2737

inside the vic is a flat ferrite core, the core must be custom made and is expensive
research suggest the cores are 2000 permeability with a gap, and 1200 permeability with no gap.
it is my opinion that a gap would be used to adjust or tune the cores.

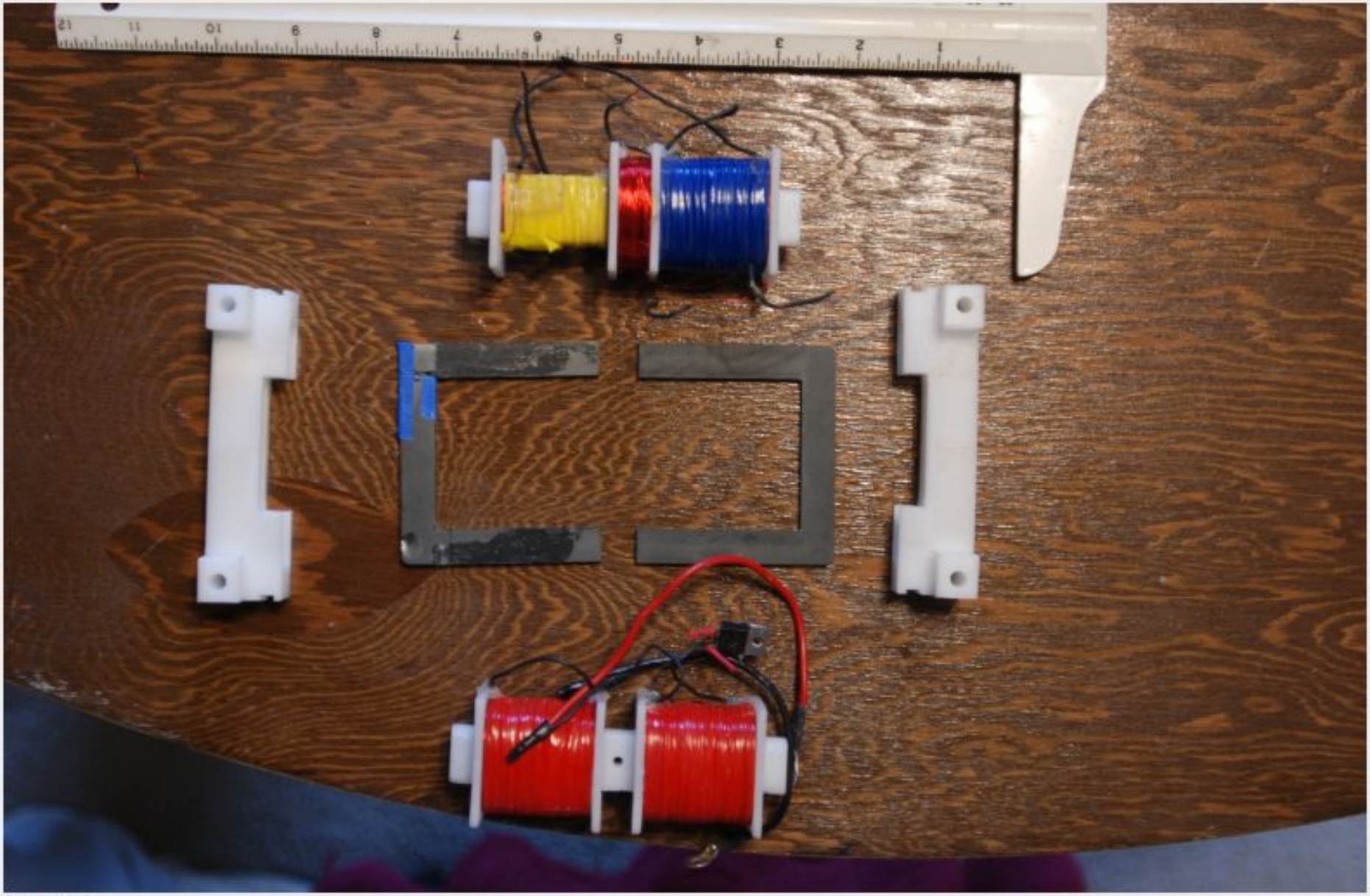

(13.PNG)

Online

Expert

Posts: 2737

this is one VIC i have built and am working on
2000 permeability core and cast resin bobbins

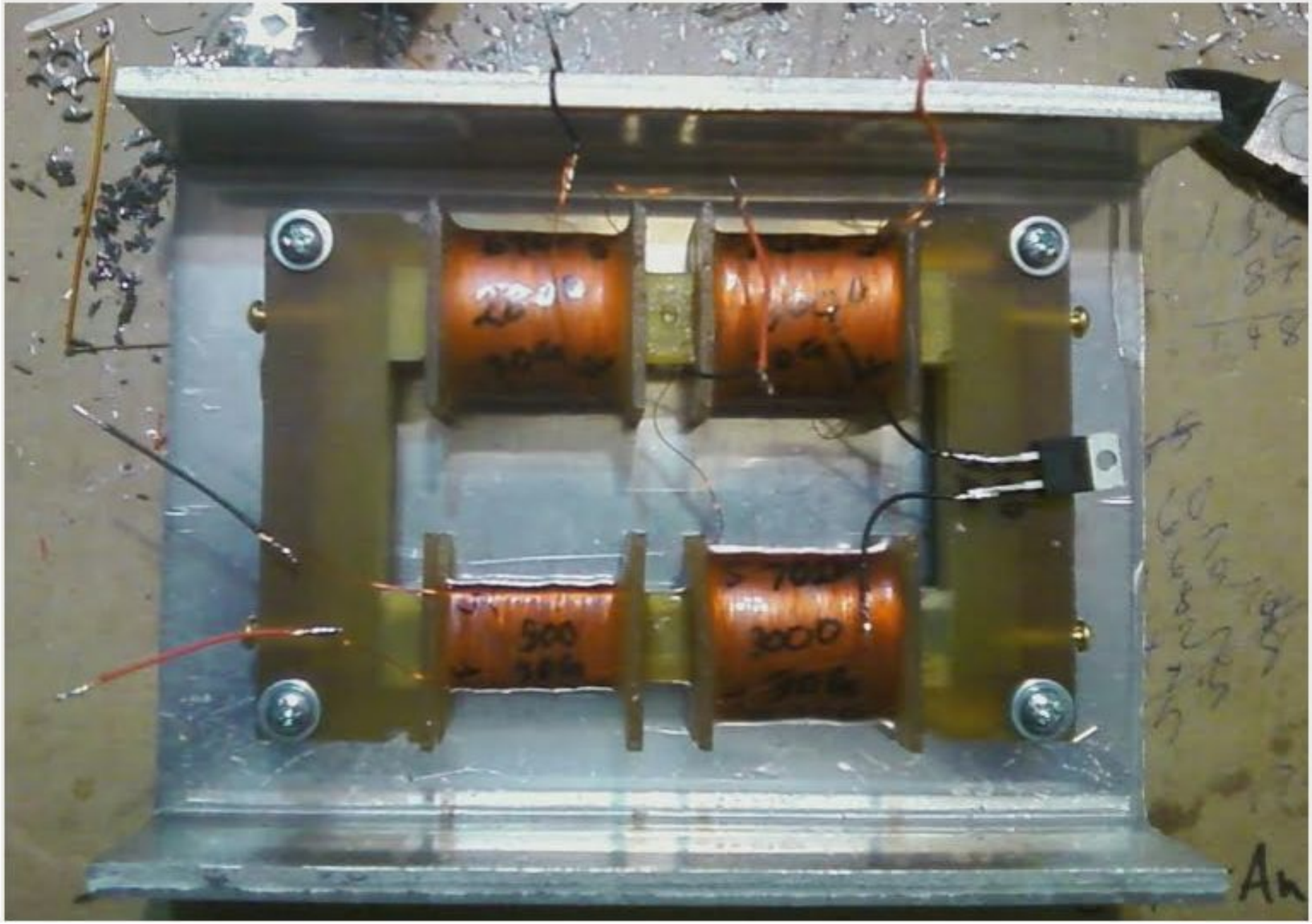

Online

Expert

this is a possible replacement cored VIC
the Tv flyback core is 2000 permeability and the bobbins are made from pvc, which can be easily cut and glued together.

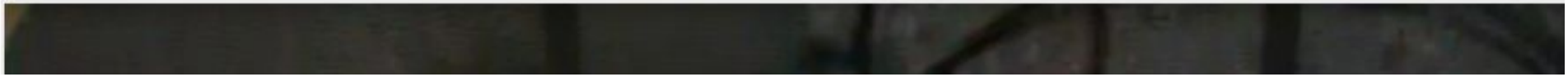

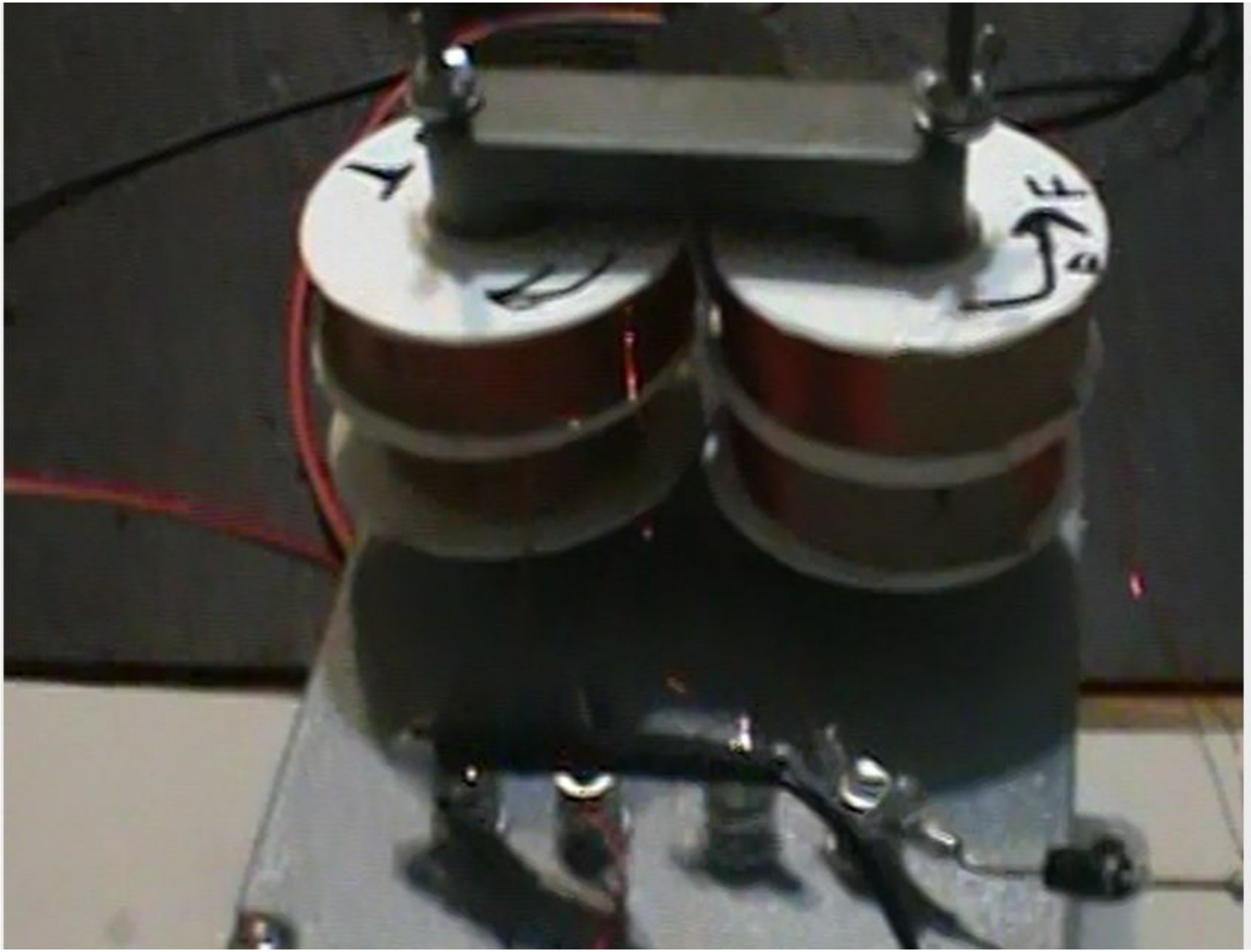

Online

Expert

The proper wind for the direction for the VIC is most likely shown here with the start DOT shown and the approx number of turns for the original with proper connection as shown in the Meyer paper work.
Please note, the actual turn ratio is plus or minus from the numbers shown here.

PROJECT ICAROS

STAN MEYER
VIC with FLAT cores

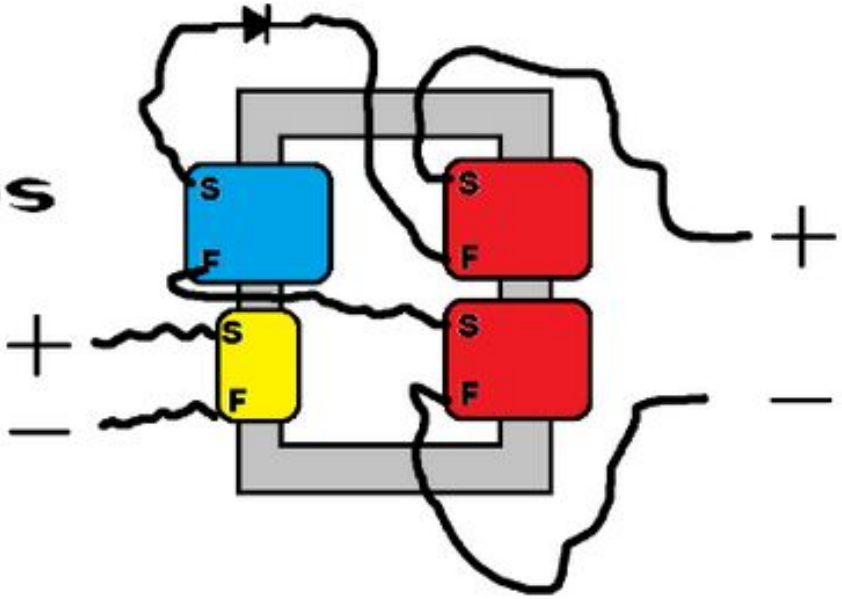

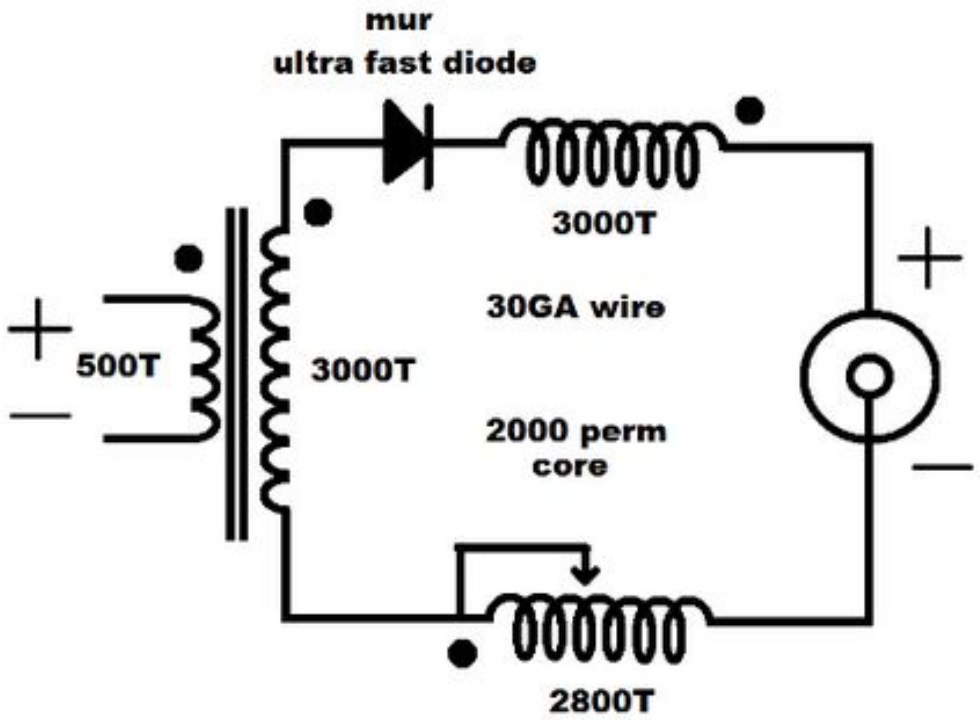

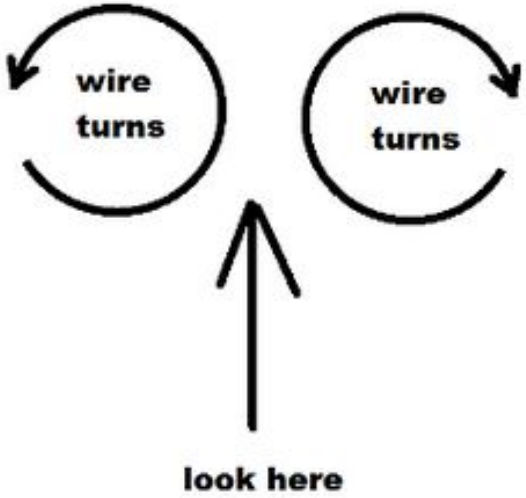

Online

Expert

Posts: 2737

and the original drawing from stan himself

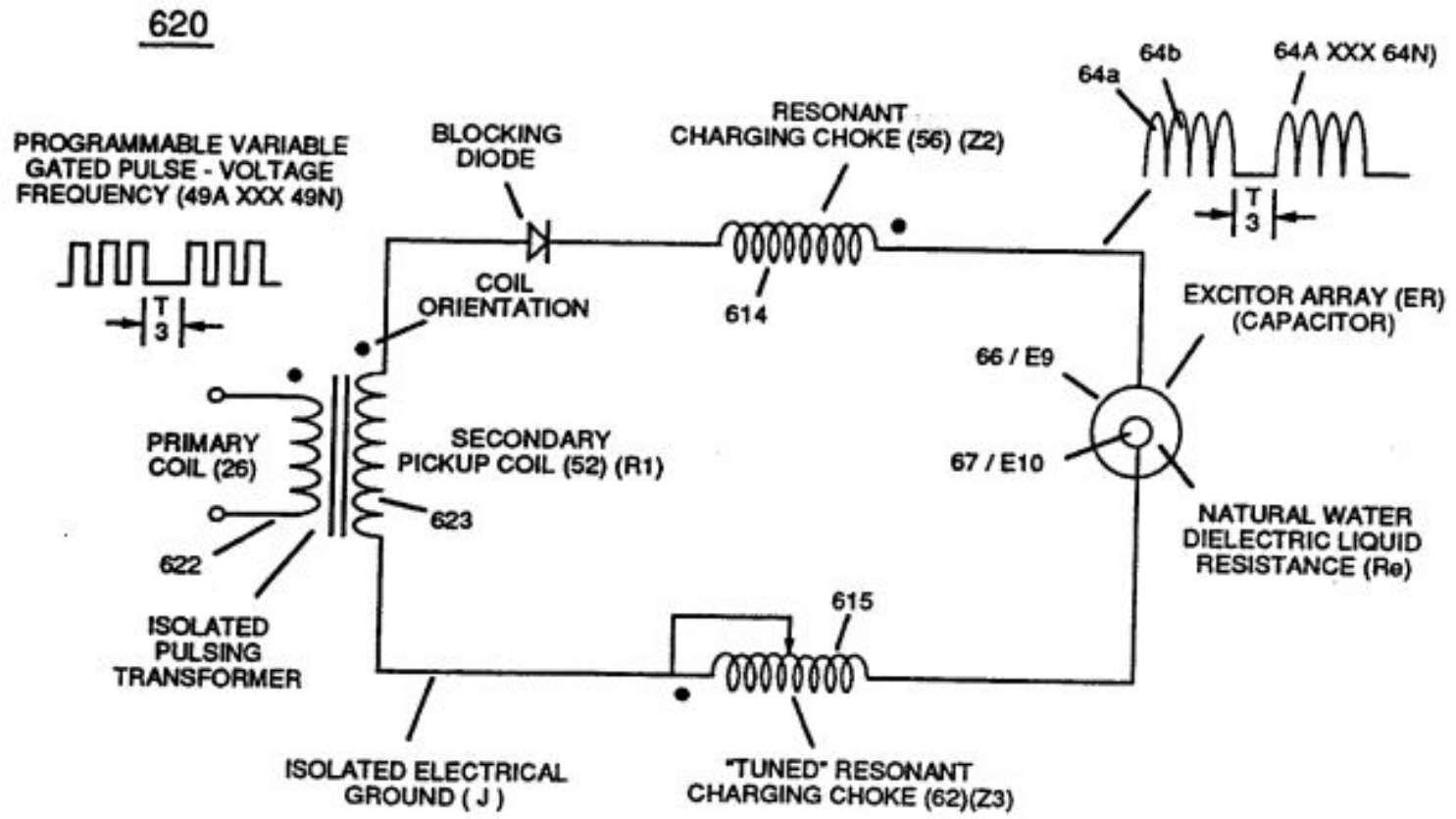

FIGURE 7-1: VIC IMPEDANCE NETWORK

(18 PNG)

Online

Expert

Posts: 2737

this shows the distributed inductance and capacitance of the coil inductors. only

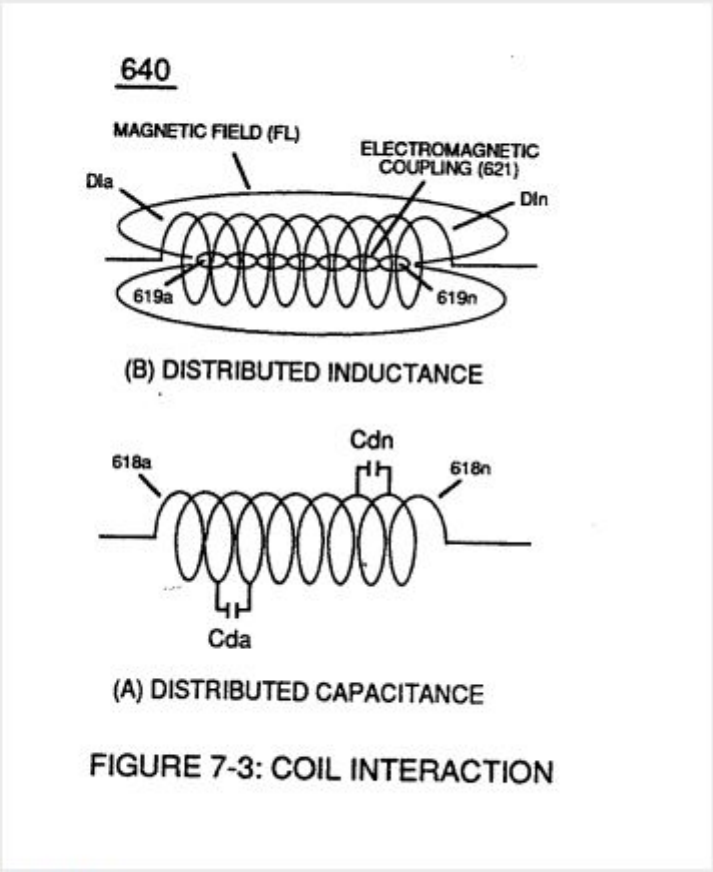

(19.PNG)

Online

Expert

Posts: 2737

this shows where the LC resonance is
capacitance, inductanc..... resistance is always there
note the resonate cavity is clearly marked as the capacitor

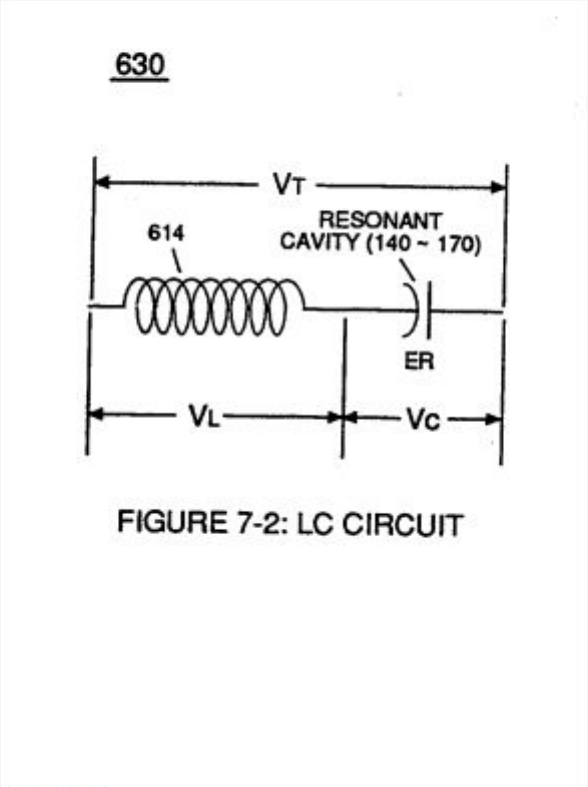

FIGURE 7-2: LC CIRCUIT

(20.PNG)

Online

Expert

Posts: 2737

now here he clearly shows us the electrical charging effect becomes a static field across the water.
B+ and B- are generally shown as a magnetic field

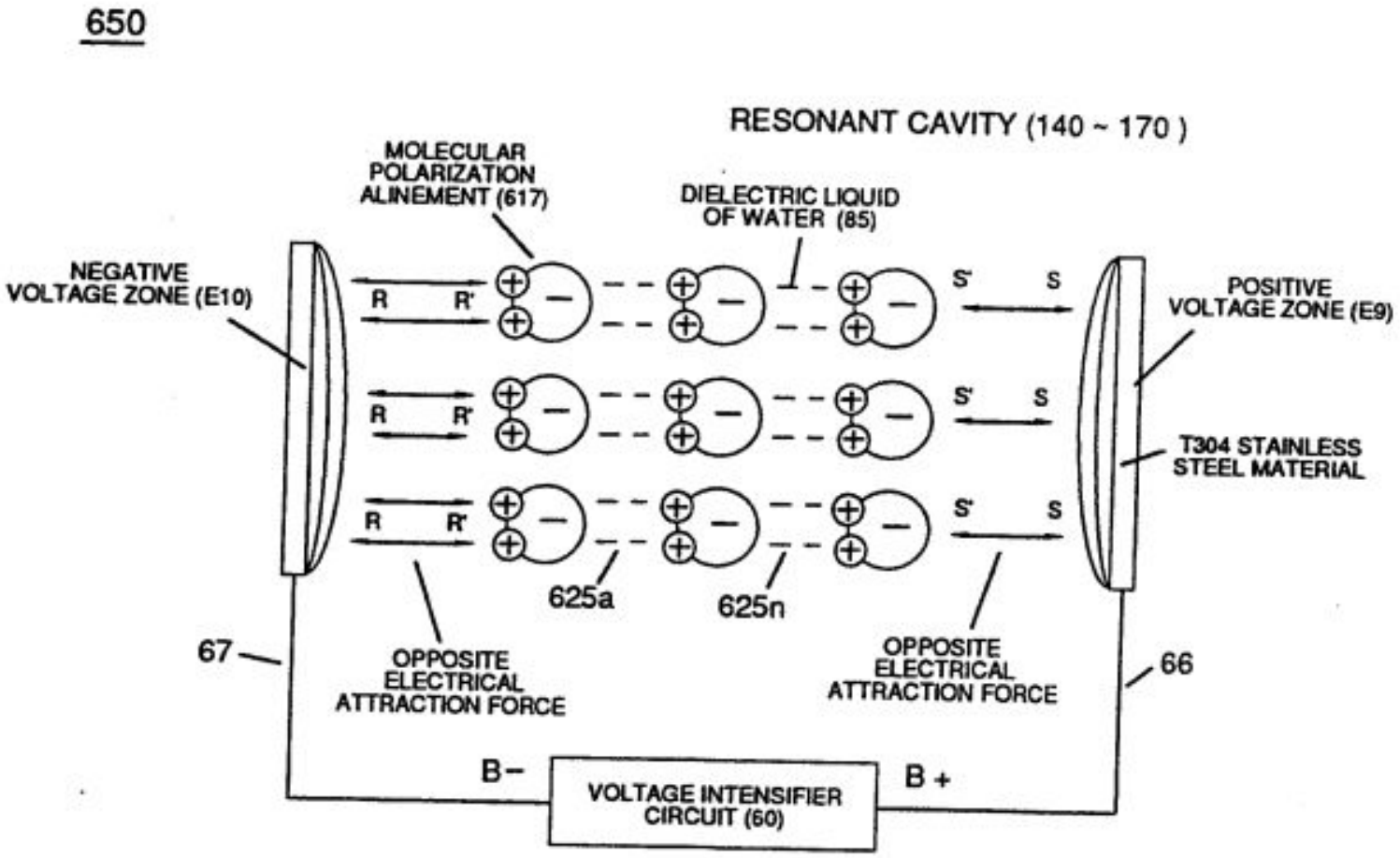

FIGURE 7-4: ELECTRICAL CHARGING EFFECT

Online

Expert

Posts: 2737

here he tells us the charge comes from the resinant charging chokes and shows the chokes have resistance and capacitance as well as inductance

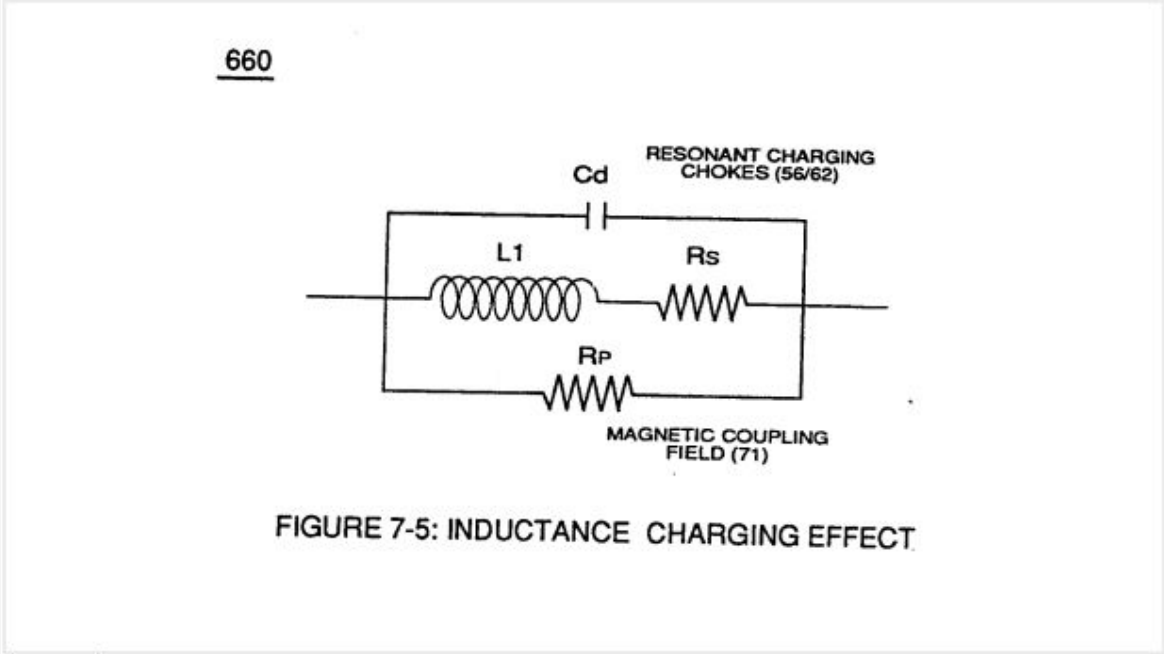

FIGURE 7-5: INDUCTANCE CHARGING EFFECT

(22.PNG)

Online

Expert

Posts: 2737

here he shows us that the L1 is the charging choke and L2 is the inhibiting choke and the cell is a resistor and a capacitor

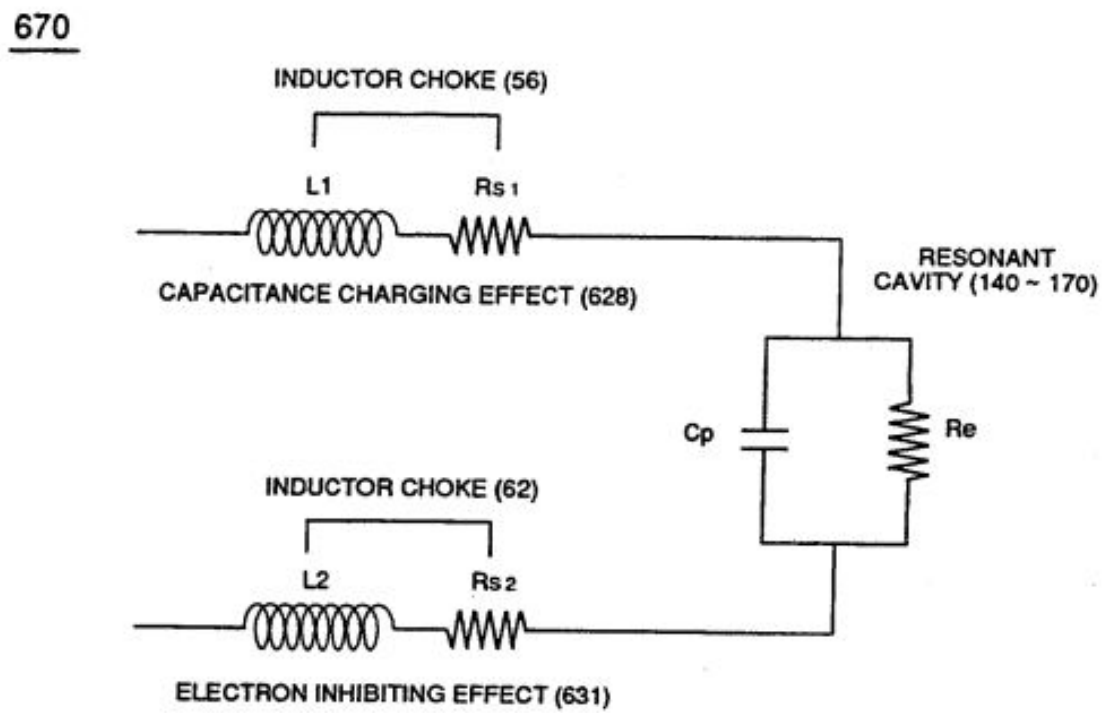

FIGURE 7-6: RESONANT VOLTAGE EFFECT

(23.PNG)

Online

Expert

Posts: 2737

here he shows the skin effect on the plates and the voltage step charging in the water

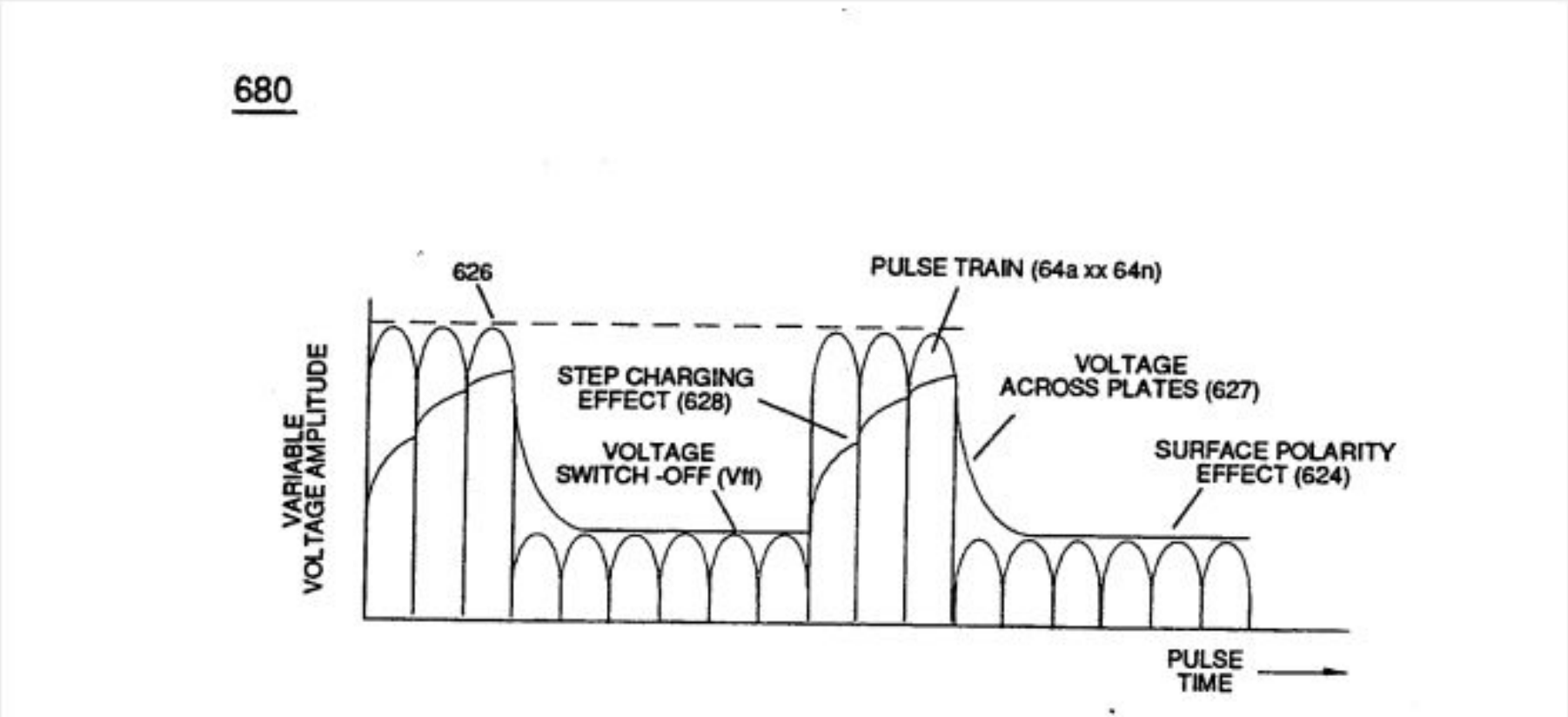

FIGURE 7-7: VOLTAGE CHARGING EFFECT

(Capture.PNG)

Online

Expert

Posts: 2737

here he lays it all out in one picture. uni polar pulse train into primary and out the secondary, then the inductors in relationship to the cell and the diode

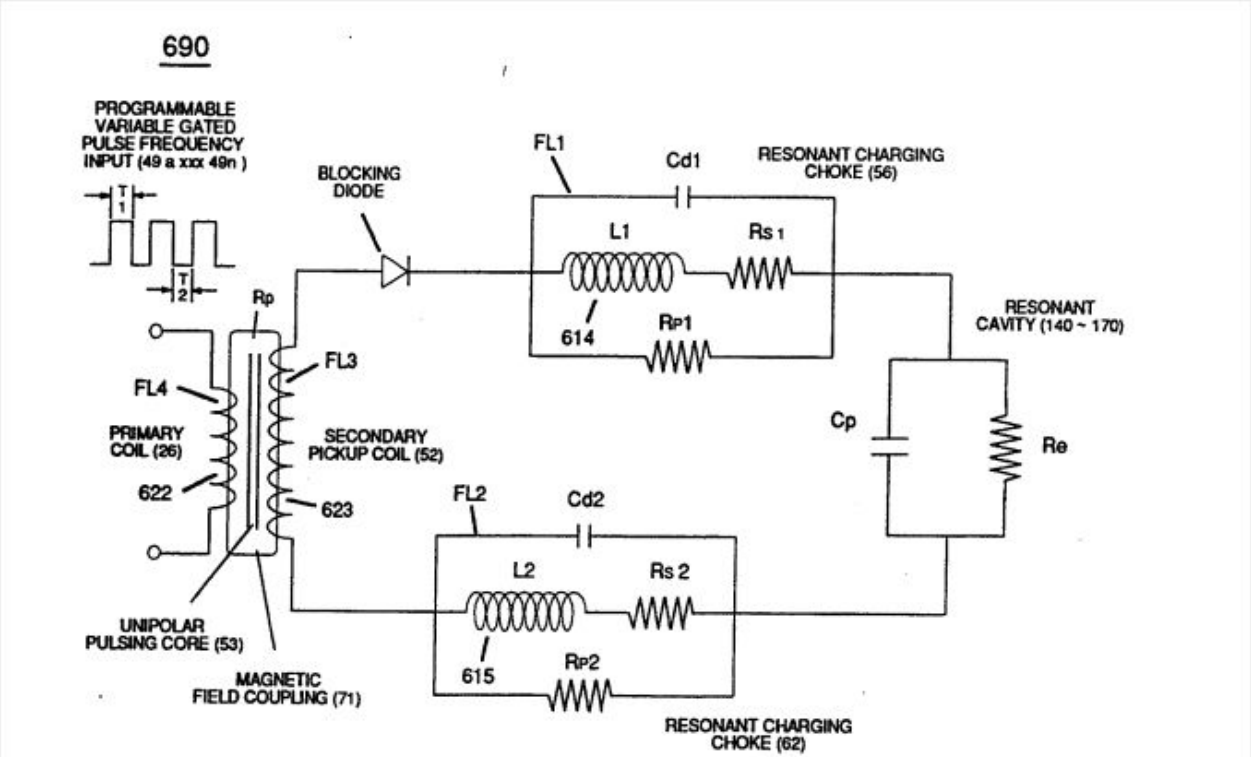

FIGURE 7-8: VIC MATRIX CIRCUIT